AIRSYS

MANUAL

MobileCool Indoor

Installation and Maintenance Manual

AIRSYS-P-IM-MOBILECOOL-ID-E202209V01.3

This document contains proprietary information that is protected by copyright and other intellectual property laws. No part of this document may be reproduced, translated, or modified without the prior written consent of AIRSYS. The information contained in this document is subject to change without notice.

AIRSYS provides this material as is and makes no warranty of any kind, expressed or implied, including, but not limited to, the implied warranties of merchantability and fitness for a particular purpose. AIRSYS shall not be liable for errors contained herein or for incidental or consequential damages (including lost profits) in connection with the furnishing, performance, or use of this material whether based on warranty, contract, or other legal theory.

Designations used by other companies to distinguish their products are often claimed as trademarks. In this document, the product names appear in initial capital or all capital letters. Contact the appropriate companies for more information regarding trademarks and registration.

Copyright ©2019-2030 by AIRSYS

Contents

1. Overview 5

1.1 Using this Manual 7
1.1.1 Documentation Conventions 7
1.1.2 Model Identification 8
1.1.3 Acronyms and Abbreviations 9
1.2 Product Overview 10
1.2.1 Unit Operation 10

2. Installation 11

2.1 Installation Preparation 12
2.1.1 Delivery 13
2.1.2 Moving the Unit 13
2.1.3 General Safety Rules 14
2.2 Required Materials 14
2.2.1 Airsys Supplied Materials 14
2.2.2 Materials Supplied by Installer 14
2.3 Physical Installation 16
2.3.1 Select the Position for the Unit Installation 17
2.3.2 Remove the Wooden Supporter of the Unit 17
2.3.3 Make Air Openings 18
2.3.4 Making Bolt Holes 18
2.3.5 Position the Unit 19
2.3.6 Install Rain Cover 20
2.3.7 Check after Installation 21
2.4 Electrical Connections 22
2.4.1 Electrical Connection 23
2.5 Complete the Installation Checklist 23

3. Start Up 25

3.1 Check the Supply Voltage 26
3.2 Power Supply 26
3.3 Commissioning 26
3.3.1 Preliminary Checks 26
3.3.2 White Test 27
3.3.3 Start-Up 27
3.3.4 Operating Tests 27
3.4 Final Check 28
3.5 Deliver 28

4. Ordinary Maintenance 29

4.1 Check Wiring and Components 30
4.2 Perform the Step-Test 30
4.3 Air Filter Cleaning 31
4.4 Check and Cleaning the Condensing Coils 32
4.5 Check and Cleaning the Draining Pipe 32
4.6 Physical Inspection of the Damper 32

4.7 General Check 32

1. Overview

Thank you for your choice of unit by AIRSYS.

The AIRSYS line of wall mounted HVAC systems are optimized for energy efficiency. These systems are uniquely designed for the efficient removal of heat generated by electronics from enclosed shelters. The supply air of the AIRSYS system is delivered from the bottom of the machine and the return is at the top, the opposite of a traditional HVAC system. This “bottom throw” is designed to take full advantage of the fact that hotter air rises. With the exhaust located higher within the shelter, every rotation of the fan removes more heat. The cooler air supplied at the bottom accelerates this natural process. This is just one of many design features that makes the AIRSYS HVAC systems among the most energy efficient in the world.

Another feature that promotes energy efficiency is the robustly designed integrated economizer, described as “free cooling”. This feature combines with the powerful controller to provide 100% of the rated cooling capacity of the wall pack unit (Mobilecool) while consuming ~ 1kW or less whenever the outdoor temperature is a few degrees lower than a predetermined set point. This feature alone can save telecom operators significant utility costs, especially in cool weather climates.

In addition to having excellent energy efficiency, these systems are simple to operate, maintain, and service. The AIRSYS design team is committed to listening and responding to the customer community. As a result, these systems have continuously evolved with customer-defined features that have improved the overall quality and the user experience.

Usability features include:

- Simple unobstructed access to all key components for Preventive Maintenance (PM) and servicing
- No need to define compressor orientation as the units can be easily serviced with as little as an 200mm clearance on either side
- A high level of redundancy in the precision lead/lag controller to enhance reliability
- Completely selectable alarm relays (NC or NO) to enable the system to adapt to the customer’s requirements

The AIRSYS Mobilecool are available in cooling capacities from 3kW to 32kW. However, the sensible cooling capacity of these machines is as much as 40% higher than a traditional machine. An available ordering guide can help properly match the capacity of the HVAC system to the heat load in the shelter.

Heating elements can also be included per customer requirements in a range from 1.5 kW through 5.0 kW.

With a suite of best-in-class components from around the globe, AIRSYS MOBILECOOL units deliver quality and reliability while

1.1 Using this Manual

Before attempting to install or start the unit, this manual should be read carefully. Retain this manual for reference for the entire operational life of the unit. This manual provides information on the following general topics:

- Product overview
- System installation including preparation, physical and electrical installation of MIDs and the controller box, and commissioning the system
- Preventive maintenance

1.1.1 Documentation Conventions

For safety and to achieve the highest levels of performance, always follow the warnings and cautions in this manual when handling and operating the AIRSYS unit.

Danger. Emphasizes hazardous conditions that could cause personal injury or death.

Warning. Indicates where the operator must proceed with caution to avoid personal injury or damage to property.

Important. Indicates technical information critical for proper installation or operation.

Table 1-1 lists symbols that may appear on the external packaging.

Table 1-1 Packing Symbols and their meaning that may appear on the external packaging.

Symbol	Meaning	Symbol	Meaning
	THIS SIDE UP Shows the orientation of the unit.		NO HOOKS Do not use hooks to lift the packed unit.
	FRAGILE Handle with care.		KEEP AWAY FROM HEAT The unit must be kept away from heat sources.
	PROTECT AGAINST RAIN: The packaged unit must be stored in a dry place.		DO NOT STACK

1.1.2 Model Identification

Each unit is identified by a model number, such as M-ID.13E1D4SR410.380/3/50. DC. The elements in the number are explained in Table 2.

01	02	03	04	05	06	07	08	09	10	11	12
M-ID	.	13	E1	D4	S	R410	.	380/3/50	.	DC	xxx

01	M-ID	**Product series name:** M-ID = MOBILECOOL-INDOOR: Packaged air conditioner with fresh air free cooling.
02	.	Separator
03	13	Unit nominal total cooling capacity in kW
04	E1	**Compressor type & number:** E1 = Hermetic scroll compressor qty 1; R1= Rotary compressor qty 1
05	D4	**Cabinet size code:** There are 4 cabinet sizes: D1, D2, D3& D4.
06	S	**Control configuration:** D: Dual control; S: Single control.
07	R410	**Refrigerant**: R410 = R410a.
08	.	Separator
09	380/3/50	**Power source:** Voltage/Phase/Frequency; 380V/3Ph/50Hz,
10	.	Separator
11	DC	**Supply Fan configuration:** DC = DC powered EC Centrifugal fan; AC = AC powered EC Centrifugal fan. (EC = Electronically commutated variable speed fan)
12	xxx	**Special code:** Utilized to designate unit customization (non-standard configuration)

Table 2 Model Number Nomenclature

1.1.3 Acronyms and Abbreviations

Table 3 lists acronyms and abbreviations used in this manual.

Term	Meaning
AAST	AIRSYS Authorized Service Technician
Amp	Ampere, unit of electric current, or rate of flow of electricity
AUT/MAN	Automatic/Manual
BMS	Building Monitoring System
CFM	Cubic Feet per Minute
Com	Common
Comp	Compressor
Cond	Condenser
DC	Direct Current
Gen Run	Generator Run Signal
EC	Electronically Commutated (Refers to variable speed evaporator/supply fan)
Evap	Evaporator
FC	Free Cooling
HVAC	Heating, Ventilation, and Air Conditioning
Humid	Humidity
I/O	Input/Output
IPU	Indoor Packaged Unit
kW	Kilowatt
LED	Light Emitting Diode
MC	Mechanical Cooling
N.C.	Normally Closed
N.O.	Normally Open
pLAN	PCO controller Local Area Network
PLD	Programmable LED Display
PSI	Pounds per Square Inch
PWM	Pulse Width Modulation
R	Read Only
RoHS	Restriction of Hazardous Substances Directive
R/W	Read/Write
Temp	Temperature
VAC	Voltage in Alternating Current
VDC	Voltage in Direct Current

Table 3 Acronyms and Abbreviations

1.2 Product Overview

1.2.1 Unit Operation

The air conditioning system has three key components:

1. The free cooling system
2. The mechanical cooling system
3. The control system

The control system determines the unit's Mode of operation: free or mechanical, as shown in Figure 1.

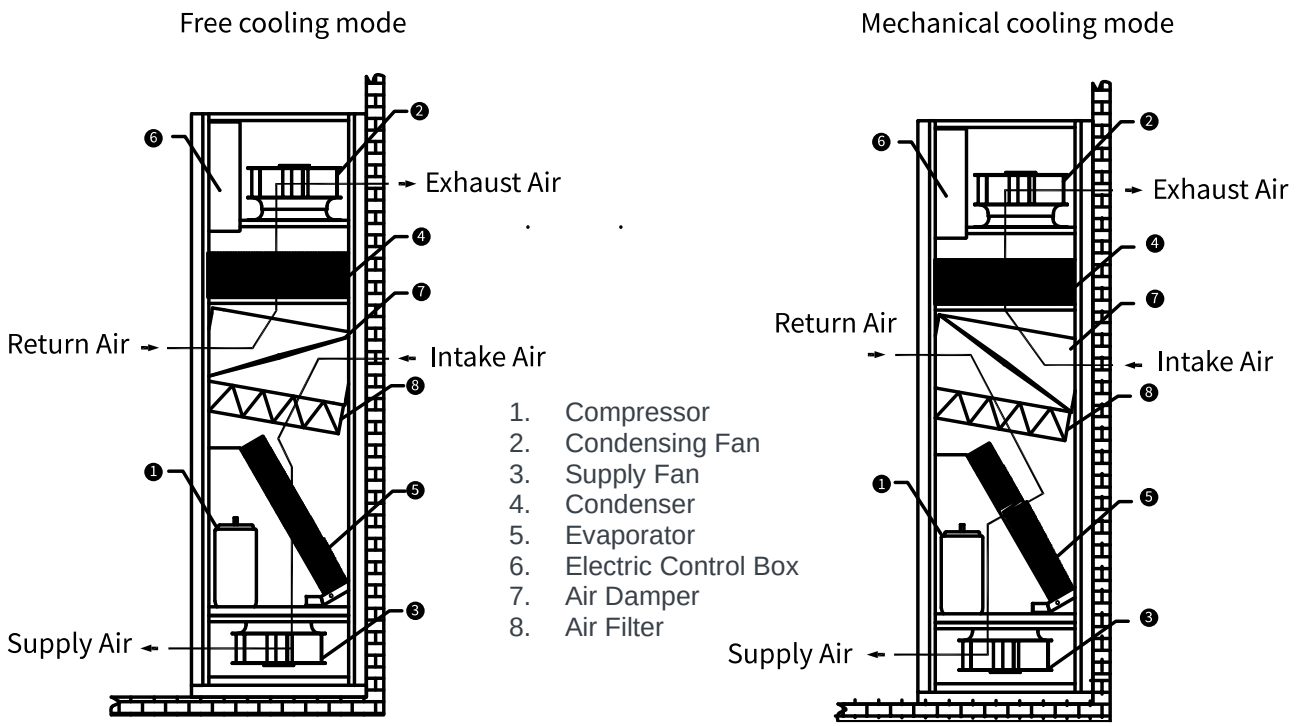

Figure 1 Basic Operation Modes

1.2.1.1 Free Cooling System

When the operating conditions for free cooling are met, the control system switches the air damper to the free cooling position. Cooler air from outside is delivered to the shelter by the supply air fan. At the same time, hot air in the shelter is discharged to the outdoor environment.

1.2.1.2 Cooling System

When the operating conditions for mechanical cooling are met, the control system switches the air damper to the mechanical cooling position. The compressor compresses the refrigerant gas and sends it to the condenser. The condenser is a heat exchanger, removing heat from the hot compressed gas and allowing it to condense into a liquid.

The liquid refrigerant is then routed to the thermal expansion valve, which acts as a restriction device by forcing the refrigerant to go through a small hole. This causes the pressure to drop. Then the liquid refrigerant is routed to the evaporator. The evaporator is also a heat exchanger, absorbing heat from the indoor hot air causing the liquid refrigerant to change back into gas. The refrigerant gas is then routed back to the compressor to complete the cycle.

The refrigerant is used repeatedly, absorbing heat from the indoor environment and discharging the condenser heat to the outdoor environment.

2. Installation

2.1 Installation Preparation

Unpack the unit carefully. Some parts are packed loosely and may move as the packaging is opened. Before discarding the box, check the packaging carefully for any parts or documents inside. Refer to Table 4 for the complete list of material shipped with each unit.

Check that:

- The supply voltage meets the requirements as designated:

AC part: 220V:197-252 VAC; 380V: 342-418 VAC; 460V:437-483 VAC

(DC Supply fan only) DC part: 36-57 VDC

Controller: VAC: 24 Vac +10 to -15% 50/60 HZ; VDC: 28 to 36 Vdc +10 to -20%

- The shelter to be conditioned is clean on the inside, and free of excess dirt and dust.

A minimum clearance of 61 cm (24”) between supply air and any equipment/rack or other obstruction is recommended since any interference with the airflow will adversely affect the efficiency of the machine.

Also verify that all installer provided materials are present (Table 5).

Installation and startup must be performed by an AIRSYS Authorized Service Technician (AAST). For more information about the AAST program, please contact AIRSYS.

Danger. All the installation work must be done by a skilled professional. Installation that does not comply with the instructions herein can result in the loss of warranty coverage. AIRSYS shall not be held liable for any damage caused to persons or objects due to incorrect installation or incorrect operational use of the units.

Warning. All the wiring installation must comply with the local compulsory safety standards and building codes under all circumstances.

Warning. Outdoor use. Risk of electric shock can cause injury or death: disconnect all remote electric power supplies before servicing.

When no longer in use, disposal of equipment and materials must be compliant with the local relevant laws and standards.

2.1.1 Delivery

When the units are delivered, be sure to inspect them to verify that they have not been damaged during transport. Also verify that all requested accessories listed on the purchase order have been included.

Important. If packages show any signs of shipping damage or potential shipping damage, it is very important to annotate shipping damage on the Bill of Lading prior to signing for the freight. In order to recover for any damage, please take detailed photographs of all the packaging before the external packaging is removed. Once detailed photos of the external packaging have been taken, then the external packaging may be removed so the items can be inspected further. Please document with photos any damage to the equipment that relates directly to the damage observed to the external packaging.

Without the detailed photos, it will be very difficult to recover equipment loss.

Warning. The warranty duration is 12 months from the date of installation. AIRSYS warrants that its products will be free from defects in materials and workmanship for a period of 12 months after installation.

The compressor is to be free from defect in material or workmanship for a period of 60 months from date of installation.

Important. For sites equipped with a generator, when the generator switches to the primary source of power, the instantaneous voltage may become lower. At this time, the compressor may run at a lower voltage which can decrease the compressor's working life. Make sure the wiring of Gen-Run signal input is connected which can protect the compressor. The warranty does not cover damage to the compressor caused by repetitive out of specification condition of the supply voltage during compressor operation.

AIRSYS will furnish free of charge replacement parts for any component failures that occur within the warranty period. Customer is responsible for the cost of shipment of replacement material from the AIRSYS.

Note: Warranty assumes that an AAST performs the installation and submits the warranty registration card that accompanied the units in shipment. If the warranty registration card was not filled out and returned to the supplier, then the warranty will be assumed to expire 12 months from the date of shipment for all components except the compressor, which will be assumed to expire 60 months from date of shipment.

This warranty does not cover damage to the systems caused by misuse or abuse of the systems such as physical damage due to mishandling. The warranty does not cover damage caused by force majeure.

Important. Any mishandling of the equipment or modifications to the equipment, unless agreed upon in writing by AIRSYS, will void the warranty.

2.1.2 Moving the Unit

Forklifts are recommended for moving, loading, unloading, and positioning the MID for installation. If bands or ropes are used to create a sling, make sure that excessive force is not applied to the upper edges of the machines or the package to avoid cosmetic or material damage. When using spacing bars, protective materials are required around the units to prevent damage.

To avoid damage to the units while moving or transporting, ensure the units always remain in the upright position.

2.1.3 General Safety Rules

Danger. Do not carry out any operation on the machines if you do not have sufficient knowledge of the operating principles and have not taken all the precautions that permit the system to operate in safe conditions.

Warning. Work on the electric board only after verifying prime power is disconnected. Do not apply power to the machine with the covers removed.

Important. Before carrying out inspections, maintenance operations, and safety checks, follow all accident- prevention standards such as wearing protective goggles.

2.2 Required Materials

2.2.1 Airsys Supplied Materials

Table 4 lists all the material supplied by AIRSYS. After opening the package, verify that all items are accounted for. If any material is missing, please contact an AIRSYS.

No.	Name	Spec.	Quantity
1	Shipping list		1
2	Wall-mounted package AC units		1
3	Key		2
4	Accessories box		1
5	Installation manual		1
6	Controller instruction manual		1
7	Circuit wiring and schematic diagram		1
8	Rubber insulation foam	2000*40*5	4
Accessories shipping list:			
9	Shipping list		1
10	Inlet rain cover assembly		1
11	Outlet rain cover assembly		1
12	Galvanized expansion bolt	M6*65	12
13	Galvanized flat washer	GB/T97.1，6	12
14	Silicone sealant		A/R
15	Cross head self drilling self tapping screw	ST4.2*13	20
16	Cross head self drilling self tapping screw	ST6.3*19	20

Table 4 Material Supplied by AIRSYS

2.2.2 Materials Supplied by Installer

Table 5 lists items required for installation that must be supplied by an AIRSYS Authorized Service Technician (AAST). The wire length and gauge depend on site-specific conditions. However, recommendations are provided.

No.	Item	Qty	Item Description	Comments
1	AC power supply cable to MID unit	A/R	Cables for MID units, AC part (compressor & heater)	Refer to Summary Electrical Ratings
2	DC power supply cable to t MID unit	A/R	Cables for MIDs DC part (supply fan if needed)	Refer to Summary Electrical Ratings
3	Alarm wiring harness	A/R	1 cable with 2 wires, length as needed	Alarm connection to controller box, 2 alarm inputs and 2 alarm outputs; all alarm connections are optional
4	Adhesive tape	A/R	With single-sided adhesive	
5	Silicone sealant	A/R	Commercial grade outdoor silicone sealant	
6	Nylon zip-tie	A/R	Small nylon zip tie	For properly dressing cables and harnesses
7	Breakers for AC power panel	3	One 10 amp circuit breaker for ASLLC.2B; One circuit breakers each for each unit's AC power, amperage based on model number	Refer to Table 6: MID Electrical Ratings
8	Breakers for DC power panel (only for ASLLC.2A.48 and DC fan HVAC)	3	One 10 amp circuit breaker for ASLLC.2B.48; One circuit breaker each unit's DC power, amperage based on model number	Refer to Table 6: MID Electrical Ratings

Table 5 Materials Supplied by the Installer

2.3 Physical Installation

To assist in the installation process, the following figure and table provide the dimensions of the units to a tolerance of ± 1/16” (2 mm).

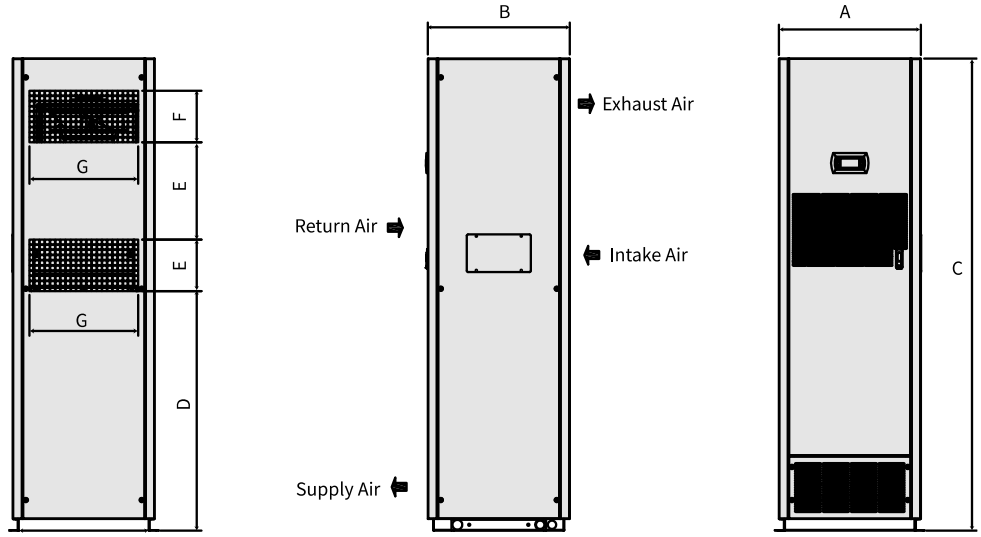

Figure 2 D1-D4 Unit Dimensions

Cabinet Size		D1		D2		D3		D4	
Unit		mm	in	mm	in	mm	in	mm	in
Width (A)		600	23.6	750	29.5	860	33.9	1010	39.8
Depth (B)		600	23.6	650	25.6	650	25.6	650	25.6
Height (C)		2000	78.7	2100	82.7	2100	82.7	2100	82.7
Outlet	D	1015	40	1067	42	1163	45.8	1163	45.8
	E	218	8.6	218	8.6	218	8.6	218	8.6
	F	412	16.2	412	16.2	412	16.2	412	16.2
	G	460	18.1	592	23.3	702	27.6	856	33.7

Table 6 External Dimensions of Basic Unit for Architectural and Installation Requirements (Nominal)

The installation of the unit will require the following tasks, which are specified below. If necessary, the work can be done in parallel. There are two ways for the unit installation: one way is back to the wall; the other way is through the air duct (Customer-provided).

Model		3R1D1	5R1D1	7E1D2	10E1D3	13E1D4	15E1D4
Width	mm	600	600	750	860	1010	1010
	in	23.6	23.6	29.5	33.9	39.8	39.8
Depth	mm	600	600	650	650	650	650
	in	23.6	23.6	25.6	25.6	25.6	25.6
Height	mm	2000	2000	2110	2110	2110	2110
	in	78.7	78.7	82.7	82.7	82.7	82.7
Weight	kg	160	160	200	255	290	290
	lbs	353	353	441	563	640	640

Table 7 Dimensions and Weight by Model Number

Important. The wall selected for the unit must be strong enough to support both the static weight of the unit and the vibration of a unit under operation.

2.3.1 Select the Position for the Unit Installation

Make sure that there is enough space for an easy application and installation, as shown in Fig.3.

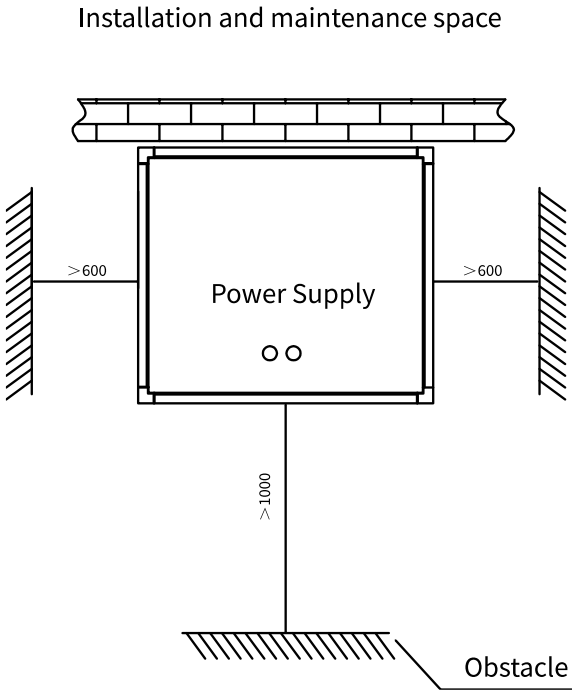

Figure 3 Working space

2.3.2 Remove the Wooden Supporter of the Unit

During the transport, in order to fix the unit, there is a screw bolt to connect between the wooden supporter and the unit, as shown in Fig. 4. So before mounting the unit, remove the wooden supporter from the unit.

Figure 4 Remove the wooden supporter of the unit

2.3.3 Make Air Openings

Making supply air opening and discharge air opening in the wall, as shown in Fig. 5.

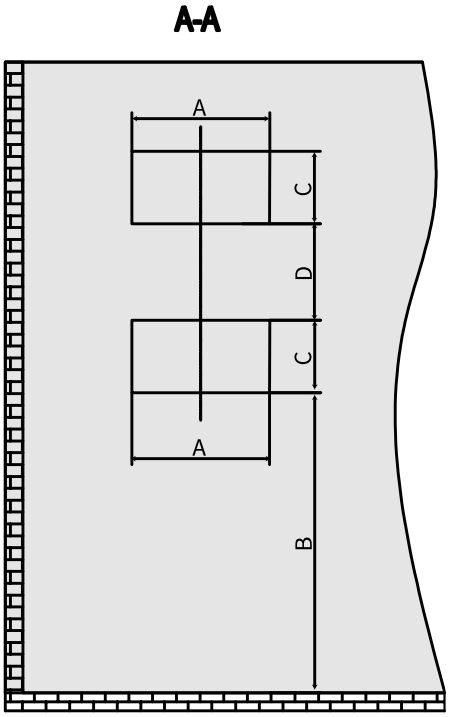

Figure 5 Making air openings

Important. Note: Make sure there are no ant obstacles in the opening so as not to reduce air flow.

Note: Make sure there are no ant obstacles in the opening so as not to reduce air flow.

Opening dimension on the wall:

Model	A	B	C	D
MOBILECOOL-INDOOR.DL.D1	465	1022	223	407
MOBILECOOL-INDOOR.DL.D2	597	1074	223	407
MOBILECOOL-INDOOR.DL.D3	707	1170	223	407
MOBILECOOL-INDOOR.DL.D4	861	1170	223	407

Important. The dimension “A” above includes 10mm thickness of rubber vibration damper plate.

2.3.4 Making Bolt Holes

Make four bolts holes on the floor for fixing the unit. Please see “**Bolt holes dimension on the floor (Back to wall)**” for Bolt holes dimension.

2.3.5 Position the Unit

Fix the unit on the floor by bolts, as shown in Fig. 6 or Fig. 7.

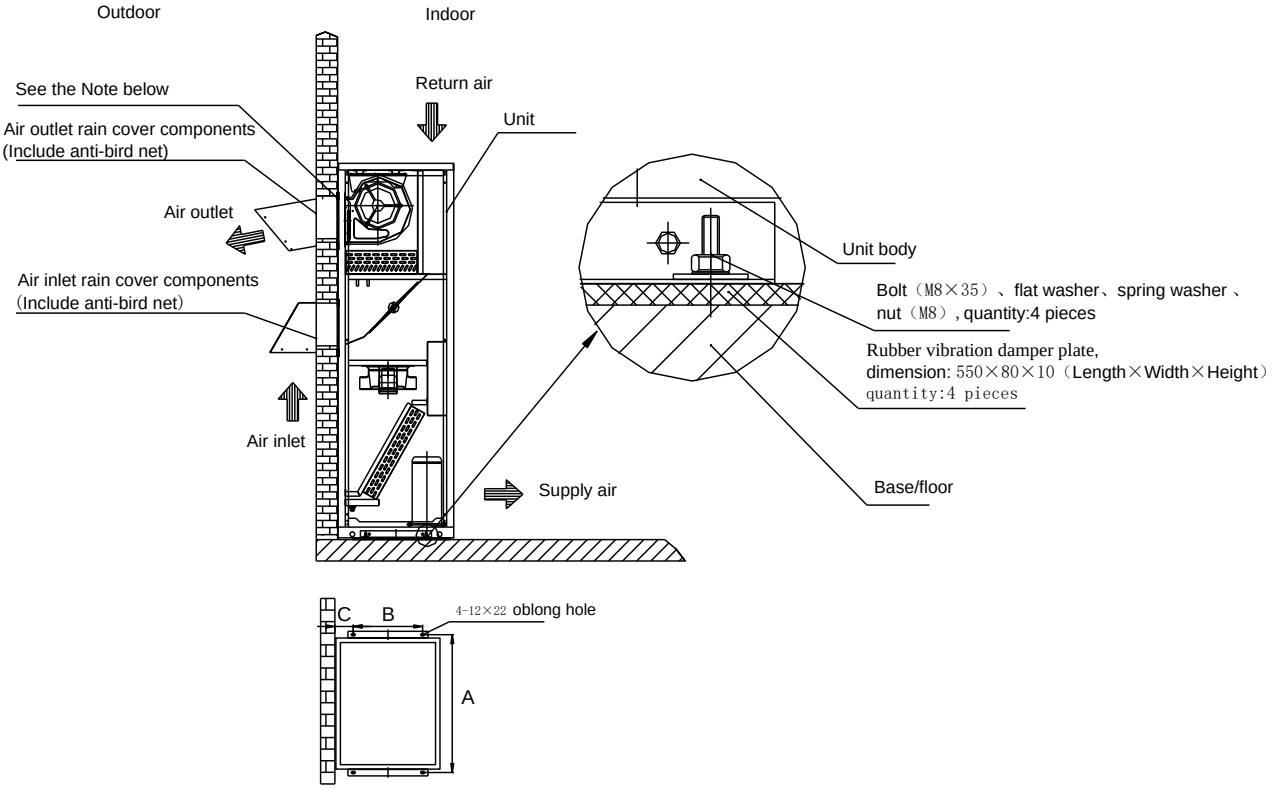

Figure 6 Installation diagram (Back to wall)

Important. Note: 5~8mm soft materials such as sponge is recommended around the openings of air intake and discharge to ensure an airtight fit.

Bolt holes dimension on the floor (Back to wall) :

Model	A	B	C
MOBILECOOL-INDOOR.DL.D1	604	300	150
MOBILECOOL-INDOOR.DL.D2	754	300	175
MOBILECOOL-INDOOR.DL.D3	864	300	175
MOBILECOOL-INDOOR.DL.D4	1014	300	175

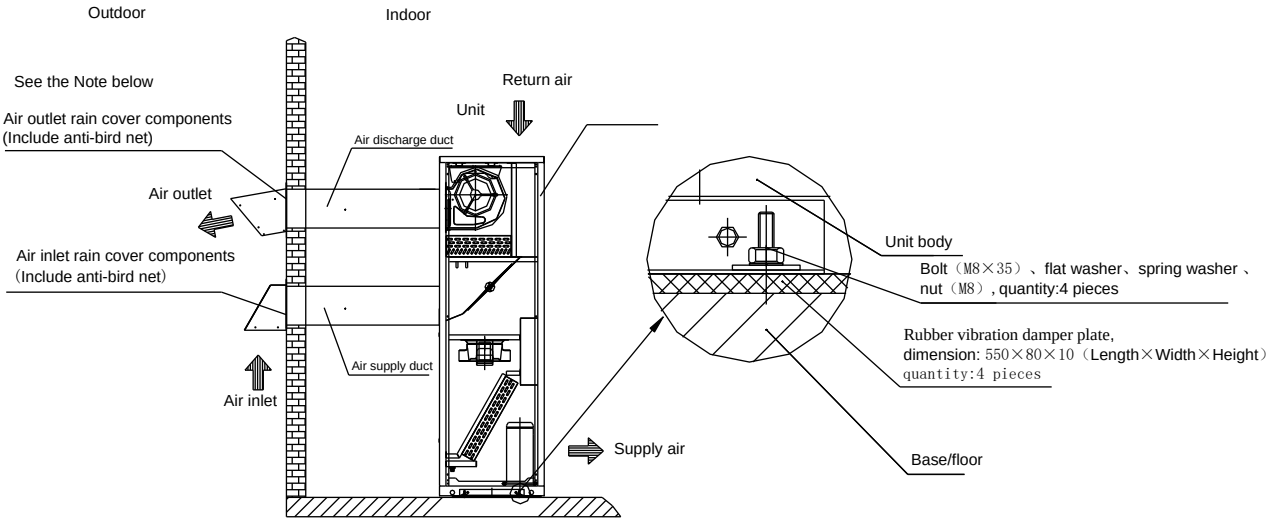

Figure 7 Installation Diagram (Through air duct)

Important. Note: 5~8mm soft materials such as sponge is recommended around the openings of air intake and discharge to ensure an airtight fit.

Important. Note: If there are obstacles between the machine and the wall, the unit can also be installed by air duct as the figure shown above. The air duct can be made a turn, but it should minimize the duct resistance. If necessary, please contact with AIRSYS technical personnel.

2.3.6 Install Rain Cover

Rain cover of air inlet and outlet should be installed on the external wall to avoid water entering the conditioned room. An air grille is needed to be installed on the air inlet rain cover to prevent leaves, flocs, mosquitoes, etc. being inhaled inside the unit, as shown in Fig. 6 or Fig. 7.

1. Check that the rain cover meets the requirements. The drawings are as follows:

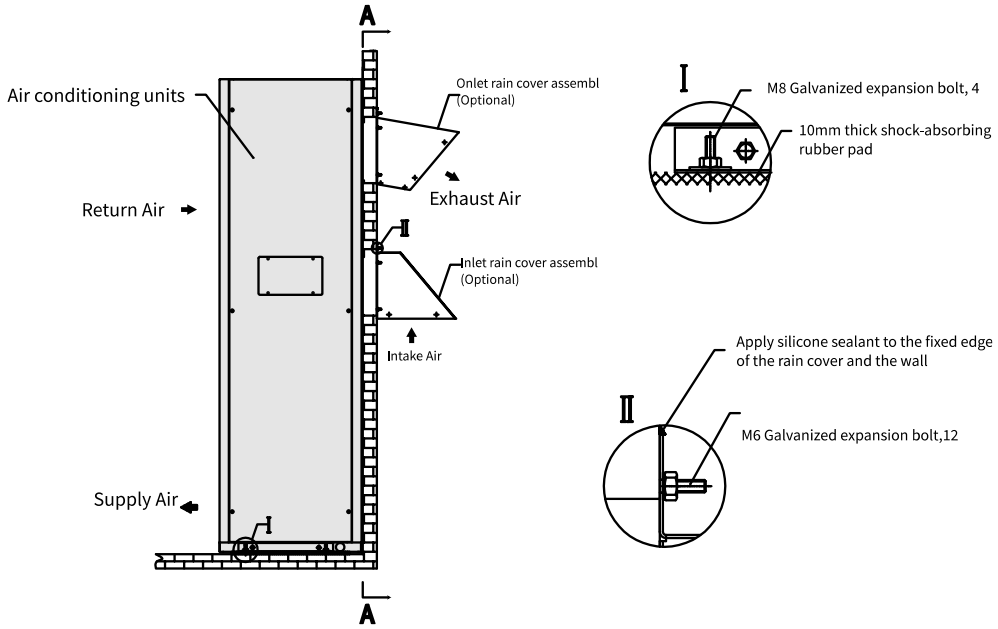

Figure 8 Installation of rain cover

Inlet air cover assembly:

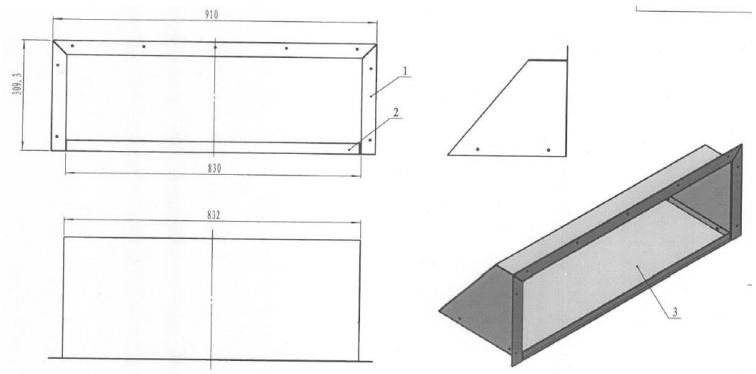

Outlet air cover assembly:

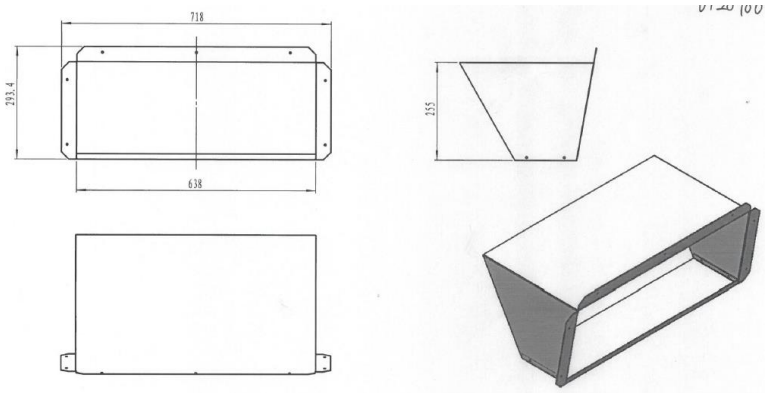

2. Wall mounting opening according to drawing size
3. Screws to fix the wall:

- Cross pan head self-tapping self-drilling screws: ST4.2×13
- Cross pan head self-tapping self-drilling screws: ST6.3×19

Note:
There should be insulation foam sealing around the opening of the wall, between the rain cover mounting surface and the base station wall. The material is coming with the unit.

The temperature sensor is fixed on the unit.

2.3.7 Check after Installation

1. Check that the unit is level; an inclination of more than 6~7mm (0.5°) could cause the condensate tray to overflow.
2. Check drain pipe: Drain outlet of the evaporator condensate drain pipe are at the bottom of the unit. Make sure that drain pipe is completely free of any obstructions.
3. Check and confirm that the unit is fixed firmly with the ground.
4. Make sure that the unit does not inhale flammable and oily gases.
5. Check and confirm that there are no obstacles blocking the air flow in front of the unit. There should be no obstacles blocking the air flow within 1000mm behind the unit, so as not to reduce the efficiency of the unit, or even cause the unit to stop.

2.4 Electrical Connections

Danger for Your Safety. The electrical connection must be designed and carried out only by operators who have specific technical expertise or particular in this sector.

Important. It is absolutely necessary, before making any connections, to use a suitable tester to check the voltage supply. This must be the same as the voltage indicated on the technical data plate.

Warning-Caution. Before proceeding with it, these operators must disconnect the electricity supply, making sure that nobody connects it again.

Important.
Electrical wiring of this unit must be executed in compliance with IEC standards or with national standards.

Check that the supply voltage (and frequency if AC power supply) are compatible with those of the unit.

Check that the component connections in electric box of the unit is not loosen.

Check that power cables are installed with a sufficient distance from alarm and signal cables.

Check that the connection cables have a section suitable to the absorbed power and cable length

Danger for Your Safety. Interrupt power supply before working on the system.

Important. The inobservance of these instructions might provoke damages or malfunction of components and the warranty shall become forthwith void.

2.4.1 Electrical Connection

Connect the DC power supply（if required）, AC power supply, remote control terminals (Optional function), pLAN network terminals (Optional function) according to the “WIRING DIAGRAM” as it is required.

After finishing the electrical connections, carefully check the electrical connections according to “WIRING DIAGRAM”.

Important. There should be a unique power connector for each unit and install a circuit breaker and over current protection at the power connector.

The unit should be earthed firmly to prevent some dangers happened due to bad operations.

All the wires should be connected tightly.

The wires should not be contacted with refrigerant pipe, compressor, and fan motor.

Important. NO revising to the unit electric circuit! If there is a need, any modification made to the electric circuit must be authorized by AIRSYS.

2.5 Complete the Installation Checklist

All physical installation steps should now have been completed. Prior to starting the system, ensure that no steps have been omitted by completing this installation and wiring checklist.

Table 8 Installation Checklist

Date:_____Unit Factory Number:_____ (refer to the unit name plate)	
Verify Physical Installation	**✓or ✗**
Weather stripping has been attached to the air inlet and outlet of the MID between the wall and the unit.	
The entire machine is fastened and installed in level (Bracket is installed properly on C5 units).	
All the leaks are sealed with gel.	
The indoor temperature sensor, backup indoor temperature sensor, and humidity sensor have been installed	
The brackets at the bottom of the compressor have been removed and the screws refastened.	
The outdoor temperature sensor is inside the sensor box and mounted outside the shelter. Sensor box drain holes are facing downward and the through hole in the shelter wall has been sealed.	
Verify Electrical Installation	
The main voltage connections between each MID and the prime power panel are secured.	
The power connections between the controller box and power plant panel are secured.	
Proper clearance is allowed between the cables and air damper in the MID to avoid interference.	

3. Start Up

Important. Before you first start up the system, install and connect it up as described in the “INSTALLATION”, “ELECTRICAL CONNECTIONS” chapter.

Before you first start up the system, please read the Controller Operation Manual carefully for the detailed explanation of controller operation.

3.1 Check the Supply Voltage

Before the unit is powered check that the mains voltage corresponds to the rating of the machine.

Check that the mains voltage is ranging between +/- 10% of the rated voltage of the machine.

Check that the main electrical supply cable and the terminals, including the user terminals cable, are correctly hooked up.

Check that contactors are free to move.

3.2 Power Supply

Switch on the main switch.

Activate the control fuses one after another and the power switches for the unit.

Check the supply voltage.

3.3 Commissioning

Important. All machines shall be commissioned by the authorized service center; This operation shall make valid the contract warranty.

The Service Centre shall only put the machine into operation and shall make no connections and installation operations and shall not supply materials such as: refrigerating gas for unit charge, lubrication oil, consumables, etc.

Everything must be already provided to permit the necessary checks during intervention. Therefore, complete the preliminary operations before asking for startup.

Commissioning consists of five main operations: preliminary checks, white test, start-up, operating test and final check of the machine.

3.3.1 Preliminary Checks

Before starting the machine check that all operations described in **“INSTALLATION”, “ELECTRICAL CONNECTIONS”** have been correctly performed.

Check that all machines have been installed perfectly flush.

Check that there is the ground cable, its section and that the operating logics or the safety interlocks of the machine have not been modified.

Incorrect mounting and setting shall be immediately reported to those who have made the system in order that the necessary modifications are made.

3.3.2 White Test

The purpose of the operations performed in this stage is to simulate real operation without damaging components due to incorrect operations or protection failures.

For white test it is necessary to disconnect the power supply of main circuit contactor and leave connected only those for power supply of the auxiliary circuit.

It is possible to check whether, on operation demand of the various services, the contactors close the power lines, and the concerned component is not triggered.

Therefore, it is possible to stop the compressors by acting on electronic control, start the condenser fans and check the intervention of all protections on the circuit by simulating the limit conditions.

An accurate and precise white test of the equipment is essential before perfect putting into operation.

3.3.3 Start-Up

When all operations described in previous chapters have been carried out, it is possible to start the machine.

Please read the Controller Operation Manual carefully for the detailed explanation of controller operation.

Generally packaged machines require no integrations of the refrigerant charge, but it is advisable to check at this stage that the refrigerant is enough and, if necessary, top the refrigerant charge up until the refrigerant is enough.

The evaporating units provided with separate air-cooled condenser unit must be always topped up with refrigerating gas charge to compensate the additional volumes due to the refrigerant line.

Check of feed voltage in load conditions:

Check that the mains voltage is ranging between +/- 10% of the rated voltage of the machine.

For machines with tri-phase power supply check that maximum phase unbalance is lower than 3%.

To calculate the phase unbalance, measure the value of the three phase/phase voltage pairs, calculate the mean value and check that the maximum voltage ratio divided by mean voltage is lower than 1.03 and that the minimum voltage ratio divided by mean voltage is greater than 0.97.

If these conditions are not verified, this means that the mains are not suitable for the load absorbed by the machine. In this case check correct dimensioning of the electric line (cable passage sections, lengths, transformers, etc.).

Important. The machine, with phase voltages and unbalance not within the permissible range, shall not be operated otherwise the warranty will be made void.

3.3.4 Operating Tests

The most important operation consists in carefully checking all system variables to compare them with the design values and the rating.

System variables mean air temperatures at the input and output of the evaporator; condensing pressures; evaporating pressures, air flow rates; electrical absorptions; air temperatures at the input and output of the condenser;

Act as follows:

1. Connect a pair of pressure gauges on the low and high pressure sides for refrigerating circuit.
2. Putting into operation, where compressors operate under limit conditions, must be performed by checking the working pressures until they reach the rated values.
3. For the unit wait until the fans of the condensing section are started and reach the maximum speed of rotation (if necessary, modify the microprocessor parameters); check that the electrical absorption is lower than the rating; values greater than the rating indicates malfunctioning.
4. For the unit measure the air flow rate of the condenser.
5. Check the electrical absorption of compressors.
6. Check the condensation pressures by reading the pressure gauge positioned on the high-pressure side.
7. Check the refrigerant charge by means of the appropriate indicator.
8. Check the evaporating pressures by reading the pressure gauges positioned on the low-pressure side and the correct degree of overheating at the output of the evaporators.
9. Check cooling (Air temperature both at the input and output of the evaporator and air flow rate). This operation also permits to check the yield.
10. Check adjustment and any calibration adjustments and settings of the differentials for intervention of the functions, which can be controlled.

3.4 Final Check

Complete start-up operations with a general check.

It is important to check tightening of all unions and terminals and correct calibration of any thermal relays; compare this calibration with the rating.

Check settings of the microprocessor parameters.

Carefully check for any leaks in the refrigerating circuits.

3.5 Deliver

Upon completion of the above steps, the unit can be delivered.

Delivery is made official by signing the **“Start-Up Module”** and sent to AIRSYS or AIRSYS Authorized Service Center.

Important. The signature on the “Start-Up Module”, compiled with the data obtained during operating tests, makes valid the contract warranty conditions. The machine is covered by warranty only when maintenance is performed, at least during the contract warranty period, by our authorized service centers. Any conditions in derogation of what is stated above, shall be expressly requested and accepted by AIRSYS.

4. Ordinary Maintenance

Important. This section, which is mainly devoted to the end-user, is extremely important for correct operation of the equipment.

A few operations performed with care and constancy avoid serious damage to components and expensive interventions by skilled personnel.

The purpose of this chapter is to help and guide the user to minimize any interventions by skilled personnel.

4.1 Check Wiring and Components

Check the internal components of electric control box:

1. Verify that all switches and fuses are working properly.
2. Confirm that the circuit wiring is tight and correct.
3. Confirm that the input and output plug interfaces of the control board are in good contact (including the reliable connection between the display board and the main control board, and between the main control board and the temperature and humidity sensor board).
4. Confirm that the input and output connections from the main control board to the contactors, solenoid valves, high and low voltage switches, temperature switches, electric heating temperature protection switches, etc. are good.
5. Confirm that all electrical elements, control elements, lightning protection and voltage detection boards are free of dust.
6. Confirm that there is no obvious aging on the surface of control panel, display panel, temperature and humidity sensor, lightning protection and voltage detection panel.
7. Confirm whether each contactor is flexible.
8. Check the appearance of transformer or switching power supply, and check whether the output voltage is normal (24V AC ± 10% or 24VDC).

Check the cable:

1. Confirm that all cables are free of aging.
2. Check the temperature and humidity sensor:
3. Check and calibrate the temperature and humidity sensor.

4.2 Perform the Step-Test

The purpose of this test is to simulate real operation without damaging components due to incorrect operation or protection failures.

Use the step test to check that the relays, breakers, and components work normally.

To perform the step test, follow these steps:

1. In the unit off state, press **Prg** to enter the menu page.
2. Press **Up** or **Down** to select “**USER**”, and press **Enter** to access the **P0** page.
3. Enter password **1234** and shortcut password **3** to enter the **P0a** page.

4. Press **Up** or **Down** to enter the **Po1** page and enter the test page.
5. Select test type on this page: manual or automatic.

Test type:

1. Manual: Manually open the test allowed and then manually enter the test code.
2. Automatic: After manually opening the test allowed, the system automatically proceeds according to test codes 1~10, each code execution time is 3 minutes.

Code	Operation and Observation	Equipment Action
0	The unit closes, paying special attention to the two air valves closing. Up 1, down-1, confirm and return sel cod code, otherwise same parameters. If no key is pressed within 10 minutes, exit the test and return to the main screen	Equipment stop
1	Unit 1 fan start	Unit 1 air supply fan start, 10V
2	Unit 1 electric heating is started, the fan is turned on and the air supply temperature is raised. It is recommended that this test does not take too long as the controller does not touch the electrical heating overload but the strong internal power.	Unit 1 electric heating start
3	Unit 1 compressor starts, fan holds. (High and low pressure protection, manual reset required), air supply temperature drops	Unit 1 compressor start
4	Unit 1 air valve open, fan open, air valve open or not	Unit 1 air valve open, 10V
5	Unit 1 fan stops, Unit 2 fan starts	Unit 2 fan start, 10V
6	Unit 1 air valve open, fan open, air valve open or not Unit 2 electric heating starts, fan holds	Unit 2 electric heating on
7	Unit 2 compressor starts, fan holds	Unit 2 compressor on
8	Unit 2 dampers open, fans remain	Unit 2 dampers open, 10V
9	Unit 1, 2 fans on, electric heating on	
10	Unit 1, 2 fans on, compressor on, air valve on	Unit 1, 2 dampers open, 10V

4.3 Air Filter Cleaning

Dirtiness of filters reduces the flow rate of the treated air and hence their capacity.

This can be avoided by periodically and regularly cleaning filters.

The frequency at which filters must be checked exclusively depends on the degree of dust of environment.

However it is advisable to:

- Check filters for any dirtiness on a weekly basis.
- Use vacuum cleaner to clean the filter every two weeks.
- Clean filters with water monthly.
- Replace filters every six months.

It is evident that the recommended time frequencies are an indication.

In dirtiness condition, it may be necessary to increase the frequency of checks and maintenance operations.

Danger for Your Safety. Stop the machine and remove power supply from the equipment to perform these operations.

4.4 Check and Cleaning the Condensing Coils

During the hottest season, when maximum yield is asked to the unit, it is extremely important that the condensing coils can offer maximum thermal exchange.

They are normally positioned outdoor or connected to the outside and can suck dirtiness such as paper, dead leaves, dust and thus reduce the thermal exchange.

Check that this situation does not occur.

Any lack of maintenance causes the intervention of the high pressure switch and machine shutdown.

We recommend checking the exchanger condition more frequently during poplar pollination or fall of leaves.

Remove from the coil any objects which may have accumulated and wash with water.

Danger for Your Safety. Stop the machine and remove power supply from the equipment to perform this operation.

4.5 Check and Cleaning the Draining Pipe

All condensate discharges shall ensure perfect drainage to avoid water overflow. Make sure that condensate drain must be completely free of any obstructions. If necessary, clear up the condensate drain.

Danger for Your Safety. S Stop the machine and remove power supply from the equipment to perform this operation.

4.6 Physical Inspection of the Damper

The air damper is a critical element in the WPU. If it does not function normally, the free cooling function will fail. This can be avoided by periodically and regularly checking the following:

1. Check if the damper can fully open and close via the manual override
2. Check if the nuts are properly tightened, as shown in the following images

4.7 General Check

This check permits to compare the operation of the equipment with respect to the latest check made. Any differences in operating characteristics are thus identified over time.

A detailed and periodic visual inspection of the equipment and a general cleaning are always important to ensure good operation.

The periodicity of all above described operations can be generalized to a monthly intervention.

Particular system and installation situations can modify the above terms and conditions.

A well-maintained system is unlikely to be responsible for inconveniences and stops to the production cycles.

List of Tables

Table 1-1 Packing Symbols and their meaning that may appear on the external packaging. 7
Table 2 Model Number Nomenclature 8
Table 3 Acronyms and Abbreviations 9
Table 3 Material Supplied by AIRSYS 14
Table 4 Materials Supplied by the Installer 15
Table 5 External Dimensions of Basic Unit for Architectural and Installation Requirements (Nominal) 16
Table 6 Dimensions and Weight by Model Number 16
Table 7 Installation Checklist 23

List of Figures

Figure 1 Basic Operation Modes 10
Figure 2 D1-D4 Unit Dimensions 16
Figure 3 Working space 17
Figure 4 Remove the wooden supporter of the unit 17
Figure 5 Making air openings 18
Figure 6 Installation diagram (Back to wall) 19
Figure 7 Installation Diagram (Through air duct) 20
Figure 8 Installation of rain cover 20

AIRSYS Global Subsidiaries Contact:

Headquarter

AIRSYS Cooling Technologies, Inc
Add: 7820 Reidville Rd. Greer, SC 29651 , USA
Tel: +1 (855) 874 5380
Email: sales@air-sys.us

AIRSYS (UK) Ltd.
Add: 245 Europa Boulevard, Warrington, UK. WA5 7TN
Tel: +44 (0) 1925 377 272
Call Centre: +44(0)8456099950
Email: enquiries@air-sys.uk

AIRSYS Brasil Ltda.
Add: Av. Moaci, 395 Conj 35/36 04083-000 – Planalto Paulista SAO PAULO – SP
Tel: +55 (11) 25976817 / +55 (11) 21585560
Email: airsys-brasil@air-sys.com.br

AIRSYS Deutschland GmbH
Add: Feringastr. 6, 85774 Unterföhring / München, Germany
Tel: +49 89 9921 6510
Email: anfragen@air-sys.eu

AIRSYS Refrigeration Engineering Technology (Beijing) Co., Ltd.
Add: 10th floor, Hongkun Shengtong building, 19, Ping Guo Yuan Xi Xiao Jie, Shijingshan, Beijing, China 100043
Tel: +86(0)10 68656161
Email: airsys@air-sys.com

Gu'an AIRSYS Environment Technology Company Ltd.
Add: 25, Dongfang Street, Gu'an Industry Park, Langfang City, Hebei Province, China
Tel: +86(0)10 68656161

Shanghai AIRSERVE HVAC System Service Co., Ltd.
Add: Room 1701, Xinda building, No. 322 Xianxia Road, Changning District, Shanghai, China 200336
Tel: +86(0)21 62452626 Fax: +86 (0)21 6245962

AIRSYS Singapore Pte. Ltd
Add: 50, Tagore Lane Entrepreneur Centre, #03-04 (F), Singapore 787494
Tel: +65 64991850
Fax: +65 68416301
Email: sales@air-sys.sg

AIRSYS Philippines Corporation
Add: Unit 1603 16th Floor 139 Corporate Centre Building Valero St. Salcedo Village Bel-Air 1209 Makati, Philippines
Tel: +63 84581047
Fax: +63 88470496
Email: sales@air-sys.sg

AIRSYS Malaysia Sdn. Bhd.
NO. 7-1, Jalan 109F, Plaza Danau 2, Taman Danau Desa, 58100 Kuala Lumpur Wilayah Persekutuan Malaysia
Tel: +60 3 7982 2010
Fax: +60 3 7980 1242
Email: sales@air-sys.sg

AIRSYS Australia Sales Office
Add: PO BOX 1088, Flagstaff Hill, SA, 5159, Australia
Tel: +61 479151080
Email: sales@air-sys.sg

Product design and specification subject to change without prior notice